Física Mecánica – Momentos de inercia

(Origen de las figuras: libro de Beer&Johnston)

Slender rod

$$I_y = I_z = \tfrac{1}{12} mL^2$$
$$I_{y'} = I_{z'} = \tfrac{1}{3} mL^2$$

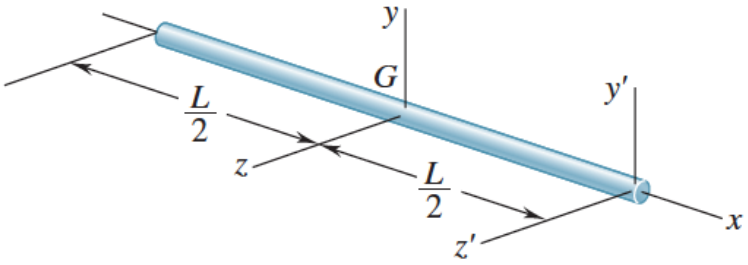

Thin rectangular plate

$$I_x = \tfrac{1}{12} m(b^2 + c^2)$$
$$I_y = \tfrac{1}{12} mc^2$$
$$I_z = \tfrac{1}{12} mb^2$$

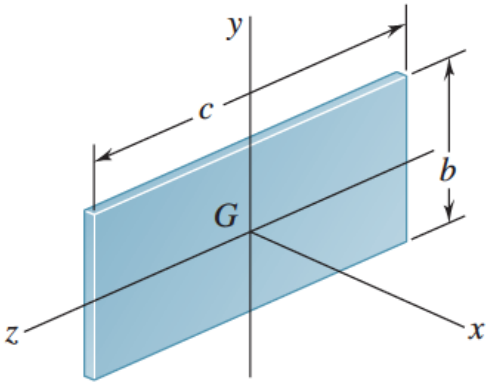

Rectangular prism

$$I_x = \tfrac{1}{12} m(b^2 + c^2)$$
$$I_y = \tfrac{1}{12} m(c^2 + a^2)$$
$$I_z = \tfrac{1}{12} m(a^2 + b^2)$$

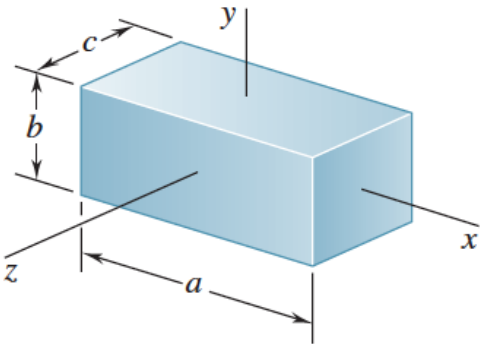

Thin disk

$$I_x = \tfrac{1}{2} mr^2$$
$$I_y = I_z = \tfrac{1}{4} mr^2$$

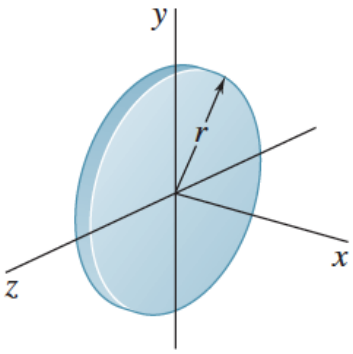

Circular cylinder

$$I_x = \tfrac{1}{2}ma^2$$
$$I_y = I_z = \tfrac{1}{12}m(3a^2 + L^2)$$
$$I_{y'} = I_{z'} = \tfrac{1}{4}ma^2 + \tfrac{1}{3}mL^2$$

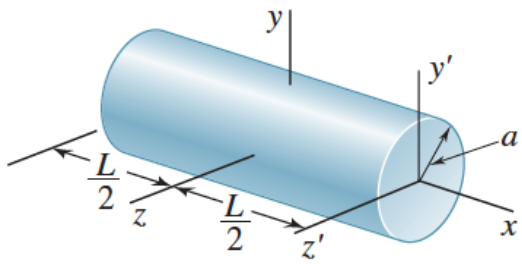

Circular cone

$$I_x = \tfrac{3}{10}ma^2$$
$$I_y = I_z = \tfrac{3}{5}m\left(\tfrac{1}{4}a^2 + h^2\right)$$

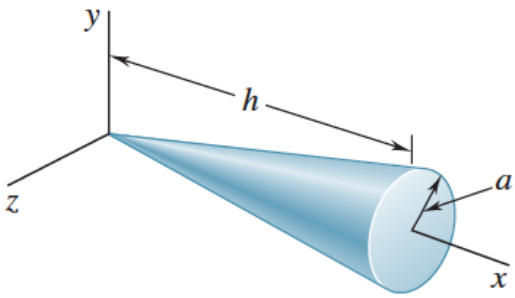

Sphere

$$I_x = I_y = I_z = \tfrac{2}{5}ma^2$$

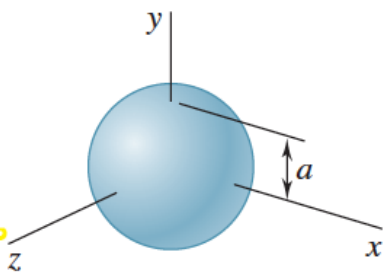

2.-